Degrees of Freedom

The *degrees of freedom* of a robot are number of different joint motions that the robot is able to utilise:

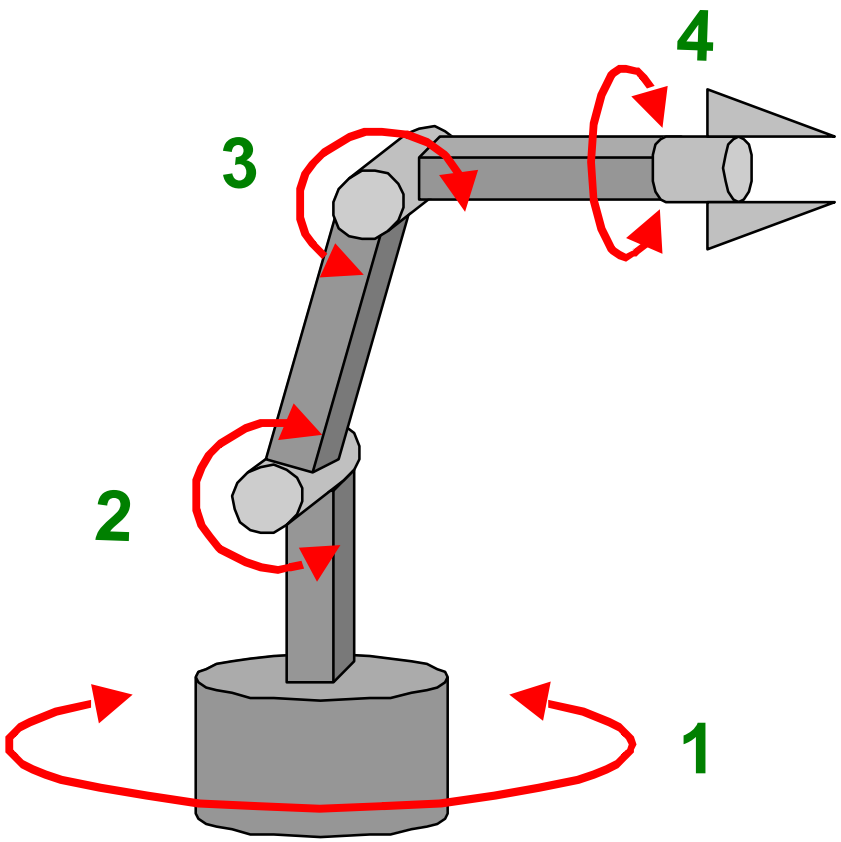

Degeneracy & Dexterity

Degeneracy occurs when a robot loses a degree of freedom and cannot operate properly. This occurs under two conditions:

- When the robot reaches the physical limit of one or more of its joints.
- When the *z*-axis of similar joints become collinear.

Dexterity involves the limitation of the robot when operating at the limits of its workspace. The end effector may be able to be positioned at these points but there is no guarantee that it can be orientated as desired.

Denavit-Hartenberg Kinematic Representation

Assign x-z axes to each joint using following steps:

- Joints represented by a *z*-axis: Revolute use the right hand rule to determine direction of *z*-axis and rotation. Prismatic joints have *z*-axis along direction of translation.

- Successive joints *z*-axes are connected by the *common normal*. The *x*-axis lies along the direction of the common normal.

- If successive *z*-axes are parallel then the common normal lies along the direction of the previous common normal.

- If successive *z*-axes intersect then the common normal is assigned to lie perpendicular to the plane formed by the *z*-axes.

Denavit-Hartenberg Reference Frames

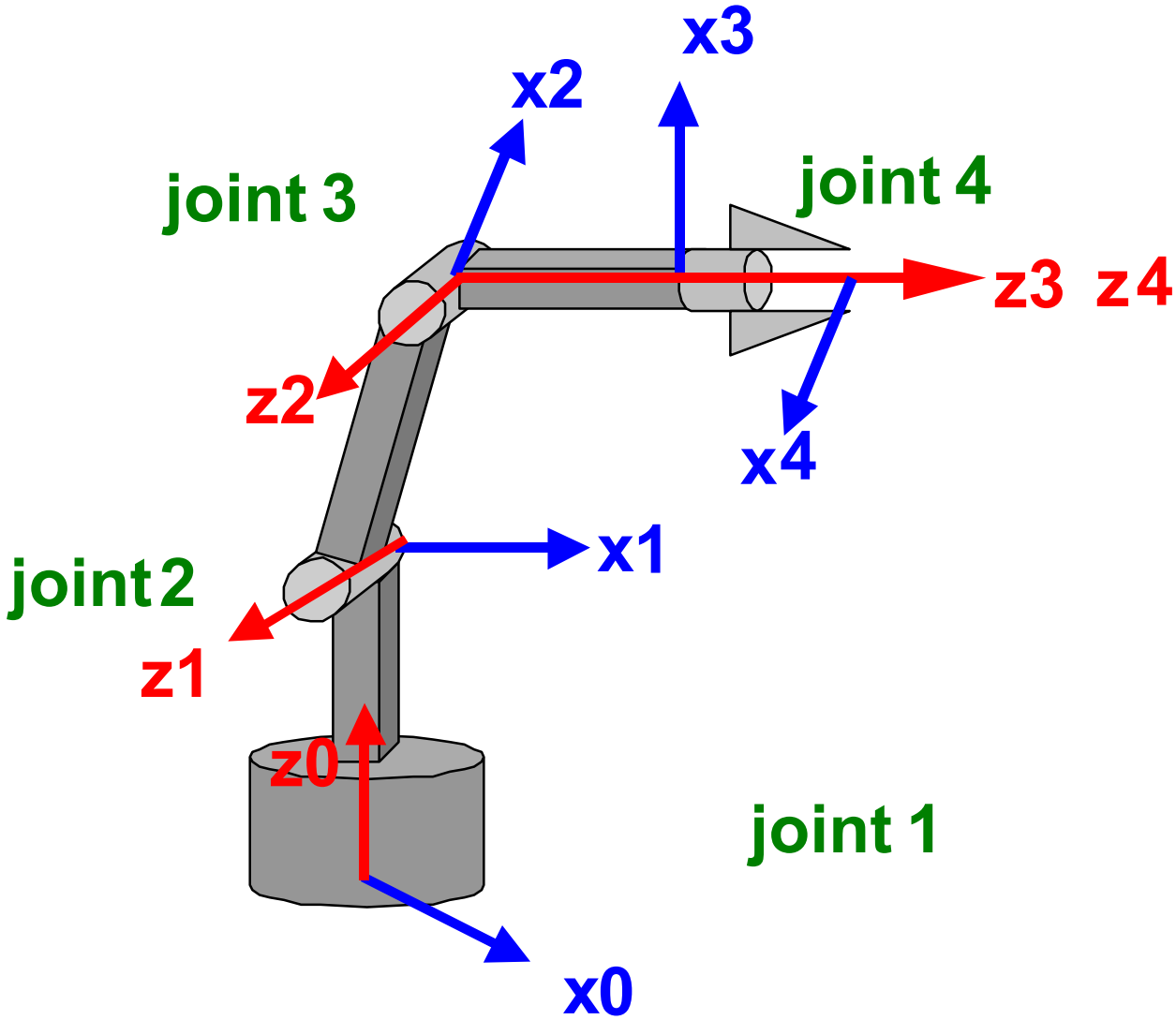

Denavit-Hartenberg Transformation

Generic Joint Configuration

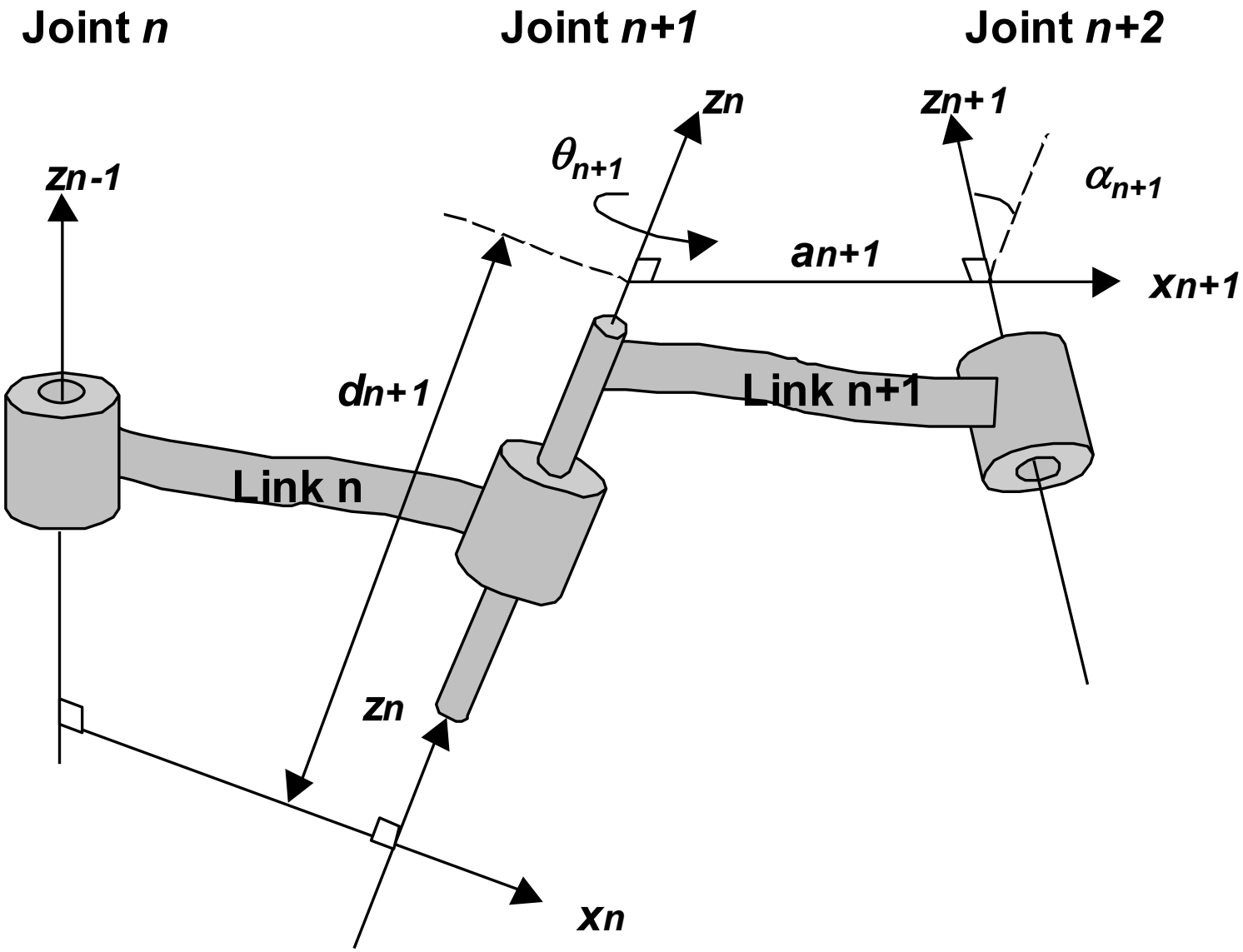

Denavit-Hartenberg Transformation

The transformation from one joint to the next is split into the following steps:

- Rotation about z_n-axis by angle θ_{n+1} .
- Translation along the z_n-axis by a distance d_{n+1} .
- Translation along the x_n-axis by a distance a_{n+1} .
- Rotation about the x_{n+1}-axis by an angle α_{n+1} .

Denavit-Hartenberg Transformation

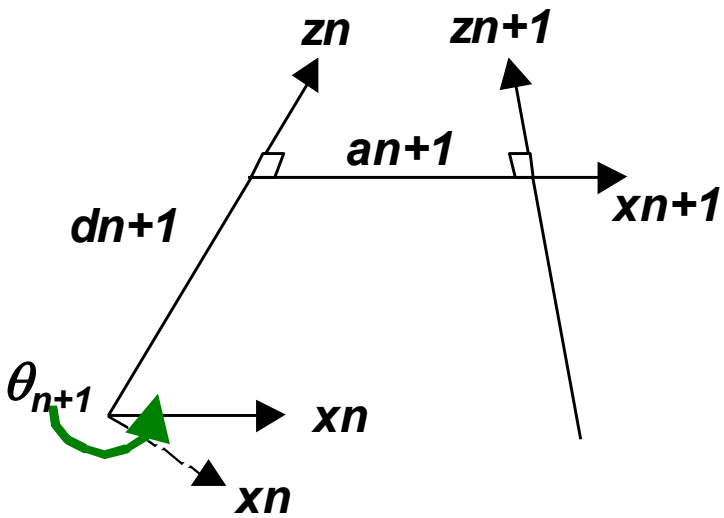

Rotation by θ_{n+1}

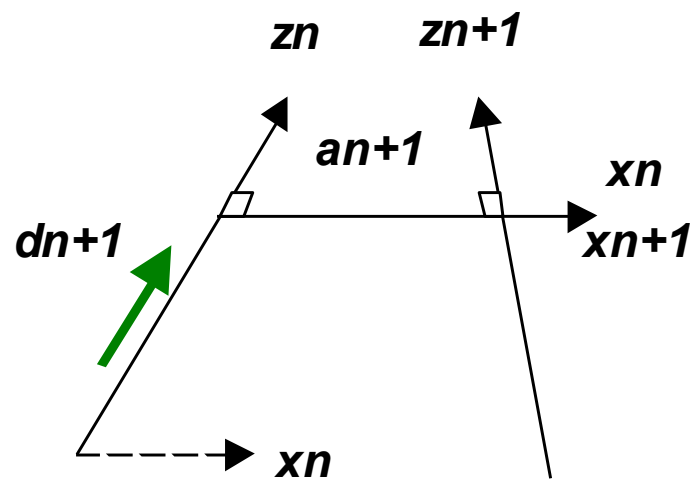

Translation by d_{n+1}

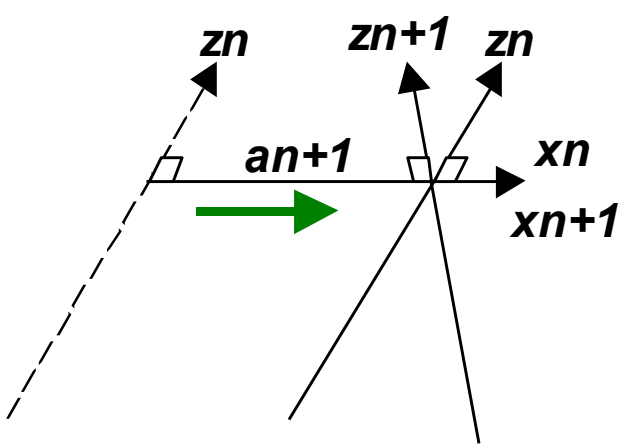

Translation by a_{n+1}

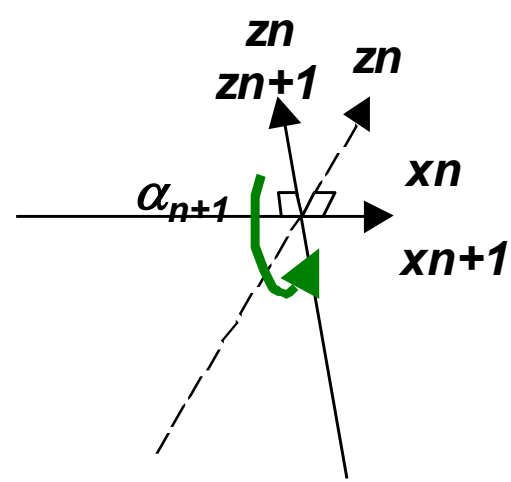

Rotation by α_{n+1}

Denavit-Hartenberg Transformation Matrix

$$
{}^{n}T_{n+1} = A_{n+1} = Rot\left(z_n, \theta_{n+1}\right) \times Trans\left(0,0,d_{n+1}\right) \times Trans\left(a_{n+1},0,0\right) \times Rot\left(x_n, \alpha_{n+1}\right)
$$

$$
= \begin{bmatrix} C\theta_{n+1} & -S\theta_{n+1} & 0 & 0 \\ S\theta_{n+1} & C\theta_{n+1} & 0 & 0 \\ 0 & 0 & 1 & 0 \\ 0 & 0 & 0 & 1 \end{bmatrix} . \begin{bmatrix} 1 & 0 & 0 & 0 \\ 0 & 1 & 0 & 0 \\ 0 & 0 & 1 & d_{n+1} \\ 0 & 0 & 0 & 1 \end{bmatrix} . \begin{bmatrix} 1 & 0 & 0 & a_{n+1} \\ 0 & 1 & 0 & 0 \\ 0 & 0 & 1 & 0 \\ 0 & 0 & 0 & 1 \end{bmatrix} . \begin{bmatrix} 1 & 0 & 0 & 0 \\ 0 & C\alpha_{n+1} & -S\alpha_{n+1} & 0 \\ 0 & S\alpha_{n+1} & C\alpha_{n+1} & 0 \\ 0 & 0 & 0 & 1 \end{bmatrix}
$$

$$
= \begin{bmatrix} C\theta_{n+1} & -S\theta_{n+1}C\alpha_{n+1} & S\theta_{n+1}S\alpha_{n+1} & a_{n+1}C\theta_{n+1} \\ S\theta_{n+1} & C\theta_{n+1}C\alpha_{n+1} & -C\theta_{n+1}S\alpha_{n+1} & a_{n+1}S\theta_{n+1} \\ 0 & S\alpha_{n+1} & C\alpha_{n+1} & d_{n+1} \\ 0 & 0 & 0 & 1 \end{bmatrix}
$$

Denavit-Hartenberg Transformation for Entire Robot

Each joint is treated in this way and therefore has a transformation matrix associated with it. The total transformation matrix for the robot is formed by post-multiplying each joint transformation matrix starting with the base joint of the robot. This give the following equation where *m* is the total number of joints:

$$^{U}T_{H} = {}^{U}T_{1}\,{}^{1}T_{2}\,{}^{2}T_{3} \ldots {}^{m\text{-}1}T_{m} = A_{1}\,A_{2}\,A_{3} \ldots A_{m}$$

Denavit-Hartenberg Parameter Table

To make the transformation process easier, a table can be constructed to show the four parameter values for each joint i.e.

#	θ	d	a	α
1				
2				
3				
4				
5				
6				

This is known as the D-H Parameter table and the parameter values can be inserted into the transformation equation to form each joint matrix.

Denavit-Hartenberg Inverse Kinematics

The inverse solution for the D-H representation is found by premultiplying the transformation relationship for the robot by the inverse matrix for each joint. With each premultiplication parameter values can be derived i.e.

$$A_1^{-1}\,{}^{U}T_H = A_1^{-1}\,A_1\,A_2\,A_3\,\ldots\,A_m = A_2\,A_3\,\ldots\,A_m$$

Then solve for available parameters and follow by another inverse multiplication:

$$A_2^{-1}\,A_1^{-1}\,{}^{U}T_H = A_2^{-1}\,A_2\,A_3\,\ldots\,A_m = A_3\,\ldots\,A_m$$

Repeat until all parameters are obtained.

The Problem with the Denavit-Hartenberg Representation

The problem with the D-H representation arises from there being no representation of the y-axis. If there are any motions related to the y-axis (e.g. due to inaccuracies in the construction of the robot) then the D-H representation will fail.

It is assumed in this course that the D-H representation will never fail.